Appendix 5
Clock Modes

This chapter describes the different clocking modes available on the ARM920T. The information in this chapter is organized as follows:

- *Overview* on page 5-2.
- *FastBus mode* on page 5-3.
- *Synchronous mode* on page 5-4.
- *Asynchronous mode* on page 5-5.

5.1 Overview

The ARM920T has two functional clock inputs, **BCLK** and **FCLK.** Internally, the ARM920T is clocked by **GCLK**, which can be seen on the **CPCLK** output as shown in Figure 5-1. **GCLK** can be sourced from either **BCLK** or **FCLK** depending on the clocking mode, selected using nF bit and iA bit in CP15 register 1 (see *Register 1: Control register* on page 2-11). The three clocking modes are FastBus, synchronous and asynchronous.

The ARM920T is a static design and both clocks can be stopped indefinitely without loss of state. From Figure 5-1 it can be seen that some of the ARM920T macrocell signals will have timing specified with relation to **GCLK**, which can be either **FCLK** or **BCLK** depending on the clocking mode.

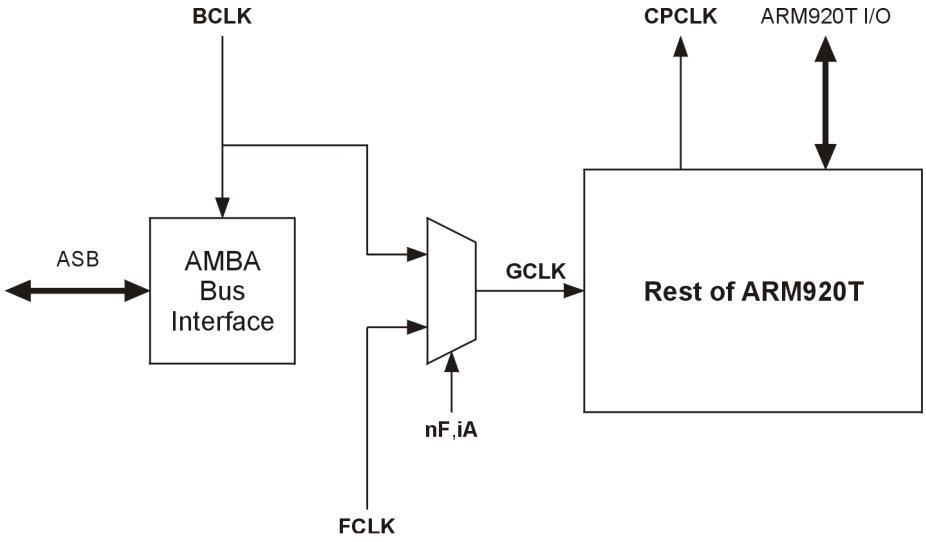

Figure 5-1 ARM920T Clocking

5.2 FastBus mode

In this mode of operation the **BCLK** input is the source for **GCLK**. The **FCLK** input is ignored. This mode is typically used in systems with high speed memory.

5.3 Synchronous mode

This mode is typically used in systems with low speed memory. In this mode **GCLK** can be sourced from **BCLK** and **FCLK**. **BCLK** is used to control the AMBA memory interface. **FCLK** is used to control the internal ARM9TDMI processor core and any cache operations. **FCLK** must have a higher frequency and must also be an integer multiple of **BCLK,** with a **BCLK** transition only when **FCLK** is HIGH. An example is shown in Figure 5-2*:*

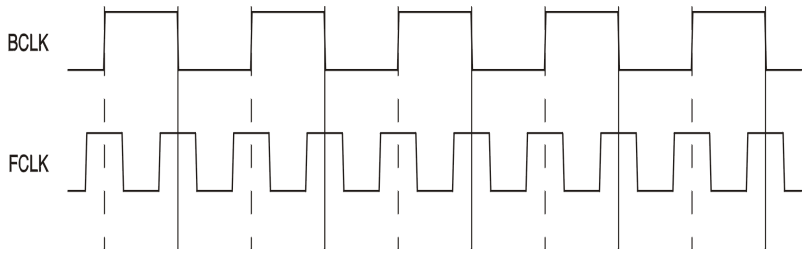

Figure 5-2 Synchronous clocking mode

If the ARM920T performs an external access, for example, a cache linefill, the ARM920T will switch to **BCLK** to perform the access. The delay when switching from **FCLK** to **BCLK** is a minimum of one **FCLK** phase and a maximum of one **BCLK** cycle. An example of the clock switching is shown in Figure 5-3. The delay when switching from **BCLK** to **FCLK** is a maximum of one **FCLK** phase.

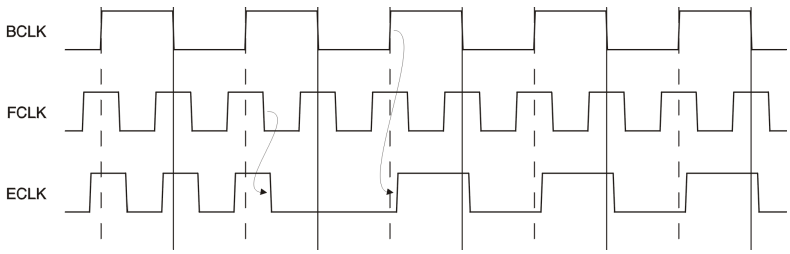

Figure 5-3 Switching from FCLK to BCLK in synchronous mode

Care must be taken if **BCLK** is stopped by the system so that when **BCLK** is restarted it does not violate any of the above restrictions.

5.4 Asynchronous mode

This mode is typically used in systems with low speed memory. In this mode of operation GCLK can be sourced from **BCLK** and **FCLK**. **BCLK** is used to control the AMBA memory interface. **FCLK** is used to control the internal ARM9TDMI processor core and any cache operations. The one restriction is that **FCLK** must have a higher frequency than **BCLK**. An example is shown in Figure 5-4:

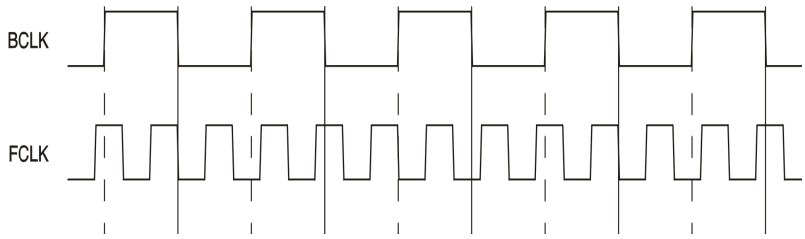

Figure 5-4 Asynchronous clocking mode

If the ARM920T performs an external access, for example, a cache miss or a cache line fill, ARM920T will switch to **BCLK** to perform the access. The delay when switching from **FCLK** and **BCLK** is a minimum of one **BCLK** cycle, and a maximum of one and a half **BCLK** cycles. An example of the clock switching is shown in Figure 5-4. When switching from **BCLK** to **FCLK** the minimum delay is one **FCLK** cycle and the maximum delay is one and a half **FCLK** cycles. An example of the clock switching is shown in Figure 5-5:

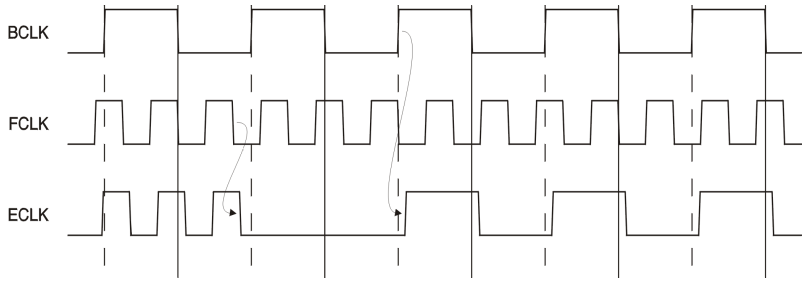

Figure 5-5 Switching from FCLK to BCLK in asynchronous mode